diy makeaway

Krachmacher bauen mit der Schweizerischen Gesellschaft für Mechatronische Kunst

DIGITAL HALL GENERATOR

PT2399 is an echo audio processor IC utilizing CMOS Technology which is equipped with ADC and DAC, high sampling frequency and an internal memory of 44K Digital processing is used to generate the delay time, it also features an internal VCO circuit in the system clock, thereby, making the frequency easily adjustable. PT2399 boast of very low distortion (THD<0.5%) and very low noise (No<-90dBV), thus producing high quality audio output. The piare optimized for easy PCB layout and cost saving advantage.

ASSEMBLING

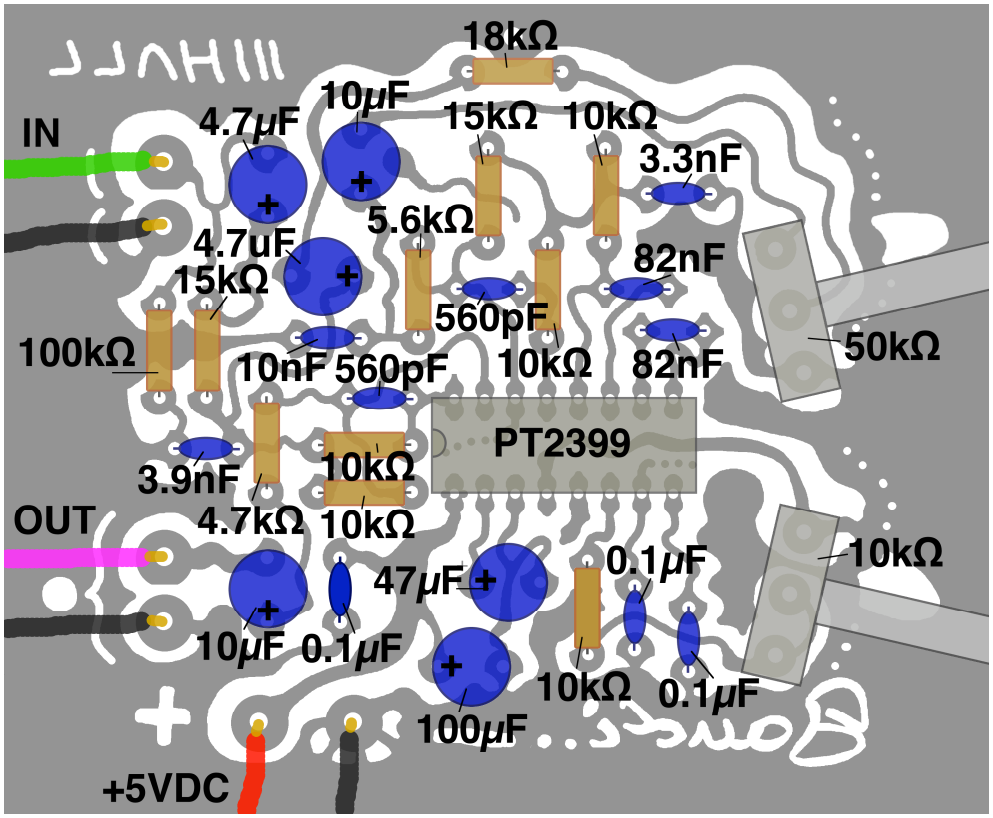

INSIDE PT2399

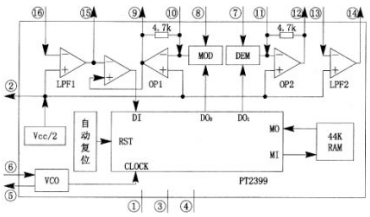

PT2399 集成块的内电路方框图

CIRCUIT

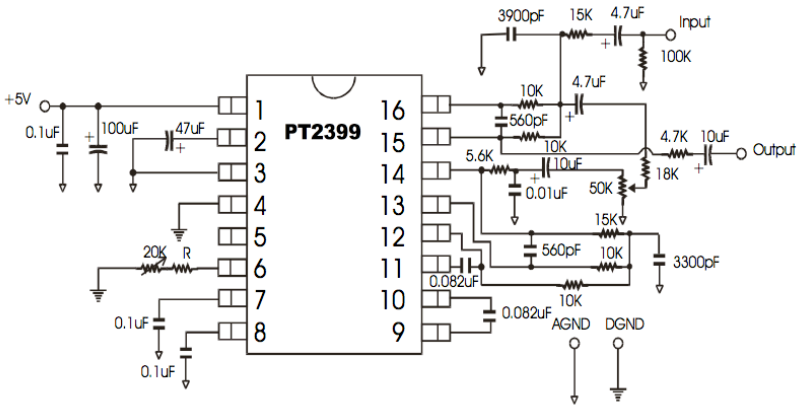

PARTS

Pcs	Value	Description
1	PT2399	Princeton Technology Echo Processor IC
5	10 kOhm	Resistor
2	15 kOhm	Resistor
1	5.6 kOhm	Resistor
1	18 kOhm	Resistor
1	4.7 kOhm	Resistor
1	100 kOhm	Resistor
1	20 kOhm	Potentiometer
1	50 kOhm	Potentiometer
1	100 uF	Electrolyte Condenser
1	47 uF	Electrolyte Condenser
2	10 uF	Electrolyte Condenser
2	4.7 uF	Electrolyte Condenser
3	100 nF	Ceramic Condenser
2	82 nF	Ceramic Condenser
1	3.3 nF	Ceramic Condenser
2	560 pF	Ceramic Condenser
1	10 nF	Ceramic Condenser
1	3.9 nF	Ceramic Condenser